www.szguangzhuo.com 广卓液晶屏 echodeng61@hotmail.com jimei@jimeihk.com +86-13411884959

Product Specification

AU OPTRONICS CORPORATION

( ) **Preliminary Specifications**
(✓) **Final Specifications**

Module	**15.6" (15.55") FHD 16:9 Color TFT-LCD with LED Backlight design**
Model Name	**B156HAN02.1 (H/W: FA)**
Note ( )	*LED Backlight with driving circuit design*

Customer	**Date**	**Approved by**	**Date**
_____	_____	***Buffy Chen***	***2019/06/21***
Checked & Approved by	**Date**	**Prepared by**	**Date**
_____	_____	**Brenda Lu**	**2019/06/21**
Note: This Specification is subject to change without notice.		**NBBU Marketing Division** **AU Optronics corporation**	

www.szguangzhuo.com
Tel/V信Wechat:+86-13411884959

www.szguangzhuo.com 广卓液晶屏 echodeng61@hotmail.com jimei@jimeihk.com +86-13411884959

www.szguangzhuo.com 广卓液晶屏 echodeng61@hotmail.com jimei@jimeihk.com +86-13411884959

Contents

1. Handling Precautions 4
2. General Description 5
2.1 General Specification 5
2.2 Optical Characteristics 6
3. Functional Block Diagram 11
4. Absolute Maximum Ratings 12
4.1.1 Absolute Ratings of TFT LCD Module 12
4.2 Absolute Ratings of Environment 12
5. Electrical Characteristics 13
5.1 TFT LCD Module 13
5.2 Backlight Unit 16
6. Signal Interface Characteristic 17
6.1 Pixel Format Image 17
6.2 Integration Interface Requirement 18
6.3 Interface Timing 20
6.4 Power ON/OFF Sequence 21
7. Panel Reliability Test 24
7.1 Vibration Test 24
7.2 Shock Test 24
7.3 Reliability Test 24
8. Mechanical Characteristics 25
8.1 LCM Outline Dimension 25
9. Shipping and Package 27
9.1 Shipping Label Format 27
9.3 Shipping Package of Palletizing Sequence 29
10. Appendix: EDID Description 30

www.szguangzhuo.com
Tel/V信Wechat：+86-13411884959

www.szguangzhuo.com 广卓液晶屏 echodeng61@hotmail.com jimei@jimeihk.com +86-13411884959

www.szguangzhuo.com 广卓液晶屏 echodeng61@hotmail.com jimei@jimeihk.com +86-13411884959

Record of Revision

Version and Date	Page	Old description	New Description	Remark
1.0 2019/06/21	All	Final Edition for Customer		

www.szguangzhuo.com
Tel/V信Wechat:+86-13411884959

www.szguangzhuo.com 广卓液晶屏 echodeng61@hotmail.com jimei@jimeihk.com +86-13411884959

www.szguangzhuo.com 广卓液晶屏 echodeng61@hotmail.com jimei@jimeihk.com +86-13411884959

1. Handling Precautions

1) Since front polarizer is easily damaged, pay attention not to scratch it.
2) Be sure to turn off power supply when inserting or disconnecting from input connector.
3) Wipe off water drop immediately. Long contact with water may cause discoloration or spots.
4) When the panel surface is soiled, wipe it with absorbent cotton or other soft cloth.
5) Since the panel is made of glass, it may break or crack if dropped or bumped on hard surface.
6) Since CMOS LSI is used in this module, take care of static electricity and insure human earth when handling.
7) Do not open nor modify the Module Assembly.
8) Do not press the reflector sheet at the back of the module to any directions.
9) At the insertion or removal of the Signal Interface Connector, be sure not to rotate nor tilt the Interface Connector of the TFT Module.
10) After installation of the TFT Module into an enclosure (Notebook PC Bezel, for example), do not twist nor bend the TFT Module even momentary. At designing the enclosure, it should be taken into consideration that no bending/twisting forces are applied to the TFT Module from outside. Otherwise the TFT Module may be damaged.
11) Small amount of materials having no flammability grade is used in the LCD module. The LCD module should be supplied by power complied with requirements of Limited Power Source (IEC60950 or UL1950), or be applied exemption.
12) Disconnecting power supply before handling LCD modules, it can prevent electric shock, DO NOT TOUCH the electrode parts, cables, connectors and LED circuit part of TFT module that a LED light bar build in as a light source of back light unit. It can prevent electronic breakdown.

www.szguangzhuo.com
Tel/V信Wechat:+86-13411884959

www.szguangzhuo.com 广卓液晶屏 echodeng61@hotmail.com jimei@jimeihk.com +86-13411884959

www.szguangzhuo.com 广卓液晶屏 echodeng61@hotmail.com jimei@jimeihk.com +86-13411884959

2. General Description

B156HAN02.1 is a Color Active Matrix Liquid Crystal Display composed of a TFT LCD panel, a driver circuit, and LED backlight system. The screen format is intended to support the 16:9 FHD, 1920(H) x 1080(V) screen and 262k colors (RGB 6-bits data driver) with LED backlight driving circuit. All input signals are eDP(Embedded DisplayPort) interface compatible.

B156HAN02.1 is designed for a display unit of notebook style personal computer and industrial machine.

2.1 General Specification

The following items are characteristics summary on the table at 25 ℃ condition:

Items	**Unit**	**Specifications**			
Screen Diagonal	[mm]	394.9			
Active Area	[mm]	344.16 x 193.59			
Pixels H x V		1920 x 3(RGB) x 1080			
Pixel Pitch	[mm]	0.17925 x 0.17925			
Pixel Format		R.G.B. Vertical Stripe			
Display Mode		Normally Black(AHVA)			
White Luminance (ILED= 23 mA) **(Note: ILED is LED current)**	[cd/m^2]	250 typ. (5 points average) (Total Solution) 212 min. (5 points average) (Total Solution)			
Luminance Uniformity		1.25 max. (5 points)			
Contrast Ratio		700 typ.			
Response Time	[ms]	25 Typ.			
Nominal Input Voltage VDD	[Volt]	+3.3 typ.			
Power Consumption	[Watt]	4.5 max. (include Logic and BLU power)			
Weight	[Grams]	370 max. (Total Solution)			
Total solution [Note: Touch module] **w/o bracket**	[mm]		Min.	Typ.	Max.
		Length	350.36	350.66	350.96
		Width	215.65	216.15	216.65
		Thickness			3.2(Panel Side) 3.4(PCBA side)
Electrical Interface		2 Lane eDP 1.2			
Glass Thickness	[mm]	0.4			
Surface Treatment		Anti-Glare			
Support Color		262K colors (RGB 6-bit)			
Temperature Range Operating Storage (Non-Operating)	[°C] [°C]	0 to +50 -20 to +60			
RoHS Compliance		RoHS Compliance			

www.szguangzhuo.com Tel/Wechat:+86-13411884959

www.szguangzhuo.com 广卓液晶屏 echodeng61@hotmail.com jimei@jimeihk.com +86-13411884959

www.szguangzhuo.com 广卓液晶屏 echodeng61@hotmail.com jimei@jimeihk.com +86-13411884959

2.2 Optical Characteristics

The optical characteristics are measured under stable conditions at 25℃ (Room Temperature) :

Item		Symbol	Conditions	Min.	Typ.	Max.	Unit	Note
White Luminance ILED=23mA			5 points average	212	250		cd/m^2	1, 4, 5.
Viewing Angle		θ_R	Horizontal (Right)	80	85	-	degree	4, 9
		θ_L	CR = 10 (Left)	80	85	-		
		ψ_H	Vertical (Upper)	80	85	-		
		ψ_L	CR = 10 (Lower)	80	85	-		
Luminance Uniformity		δ_{5P}	5 Points	-	-	1.25		1, 3, 4
Luminance Uniformity		δ_{13P}	13 Points	-	-	1.6		2, 3, 4
Contrast Ratio		CR		500	700	-		4, 6
Cross talk		%		-	-	4		4, 7
Response Time		T_{RT}	Rising + Falling	-	25	35		
Color / Chromaticity Coodinates	Red	Rx	CIE 1931	0.548	0.578	0.608		4
		Ry		0.318	0.348	0.378		
	Green	Gx		0.319	0.349	0.379		
		Gy		0.541	0.571	0.601		
	Blue	Bx		0.128	0.158	0.188		
		By		0.086	0.116	0.146		
	White	Wx		0.283	0.313	0.343		
		Wy		0.299	0.329	0.359		
NTSC		%		-	45	-		

www.szguangzhuo.com Tel/V信Wechat:+86-13411884959

www.szguangzhuo.com 广卓液晶屏 echodeng61@hotmail.com jimei@jimeihk.com +86-13411884959

www.szguangzhuo.com 广卓液晶屏 echodeng61@hotmail.com jimei@jimeihk.com +86-13411884959

Note 1: 5 points position (Ref: Active area)

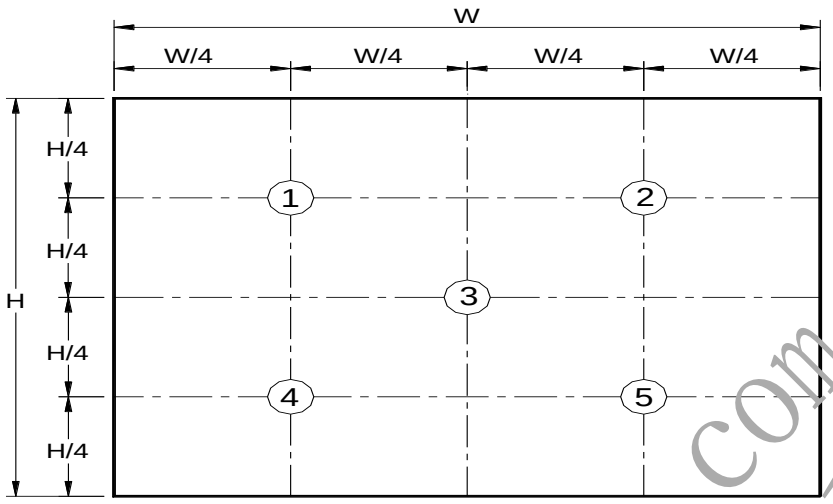

Note 2: 13 points position (Ref: Active area)

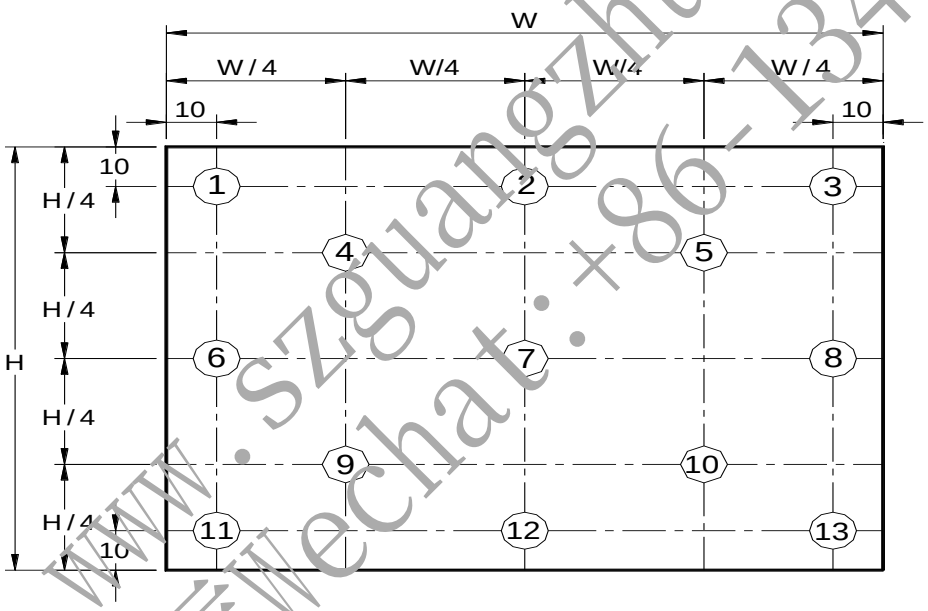

Note 3: The luminance uniformity of 5 or13 points is defined by dividing the maximum luminance values by the minimum test point luminance

$$\delta_{W5} = \frac{\text{Maximum Brightness of five points}}{\text{Minimum Brightness of five points}}$$

$$\delta_{W13} = \frac{\text{Maximum Brightness of thirteen points}}{\text{Minimum Brightness of thirteen points}}$$

Note 4: Measurement method

The LCD module should be stabilized at given temperature for 30 minutes to avoid abrupt temperature change during measuring. In order to stabilize the luminance, the measurement should be executed after lighting Backlight for 30 minutes in a stable, windless and dark room, and it should be measured in the center of screen.

www.szguangzhuo.com Tel/V信wechat:+86-13411884959

www.szguangzhuo.com 广卓液晶屏 echodeng61@hotmail.com jimei@jimeihk.com +86-13411884959

www.szguangzhuo.com 广卓液晶屏 echodeng61@hotmail.com jimei@jimeihk.com +86-13411884959

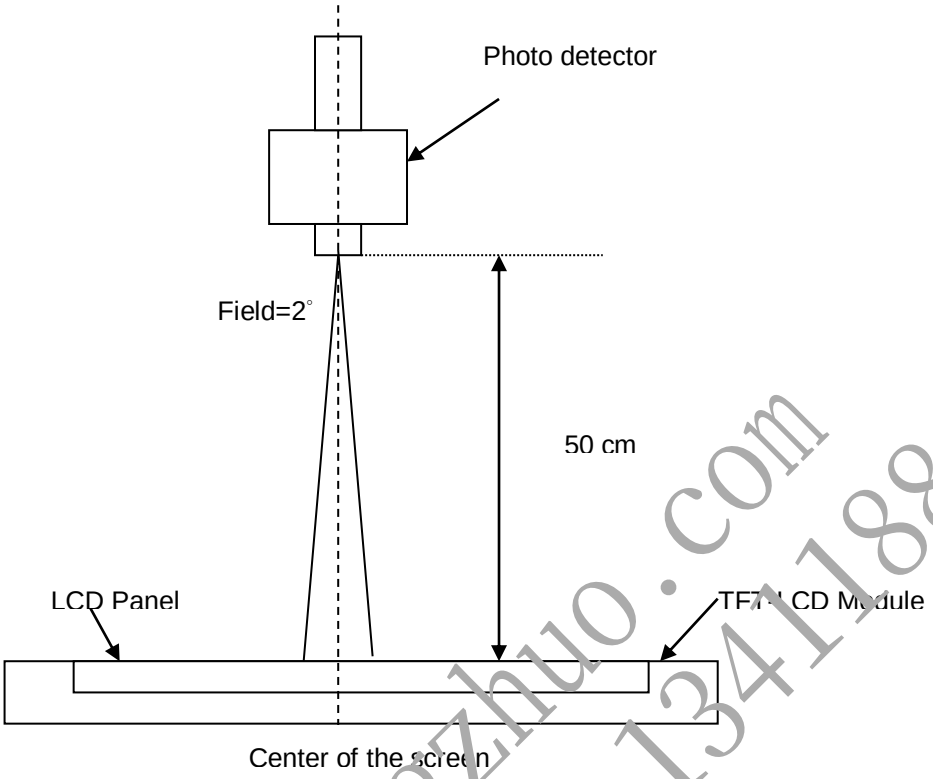

Note 5： Definition of Average Luminance of White (Y_L):

Measure the luminance of gray level 63 at 5 points, Y_L = [L (1)+ L (2)+ L (3)+ L (4)+ L (5)] / 5

L (x) is corresponding to the luminance of the point X at Figure in Note (1).

Note 6： Definition of contrast ratio:

Contrast ratio is calculated with the following formula.

$$\text{Contrast ratio (CR)} = \frac{\text{Brightness on the "White" state}}{\text{Brightness on the "Black" state}}$$

Note 7： Definition of Cross Talk (CT)

CT = | YB – YA | / YA × 100 (%)

Where

YA = Luminance of measured location without gray level 0 pattern (cd/m2)

YB = Luminance of measured location with gray level 0 pattern (cd/m2)

www.szguangzhuo.com Tel/微信Wechat：+86-13411884959

www.szguangzhuo.com 广卓液晶屏 echodeng61@hotmail.com jimei@jimeihk.com +86-13411884959

www.szguangzhuo.com 广卓液晶屏 echodeng61@hotmail.com jimei@jimeihk.com +86-13411884959

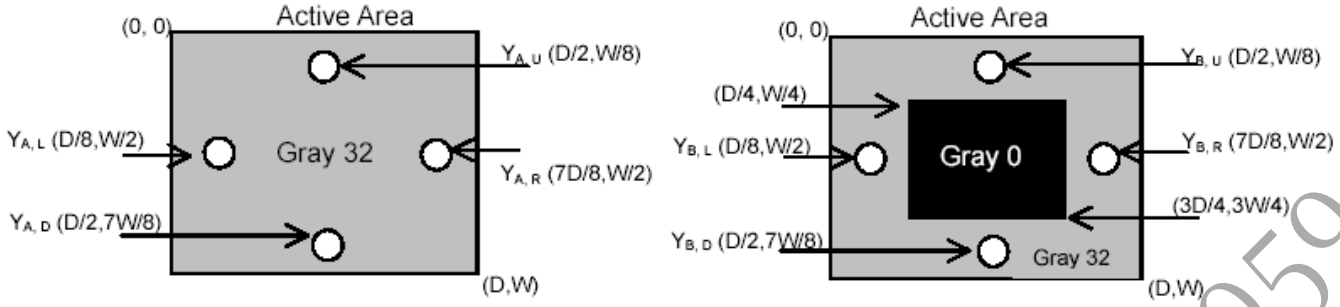

Note 8: Definition of response time:

The output signals of BM-7 or equivalent are measured when the input signals are changed from "Black" to "White" (falling time) and from "White" to "Black" (rising time), respectively. The response time interval between the 10% and 90% of amplitudes. Refer to figure as below.

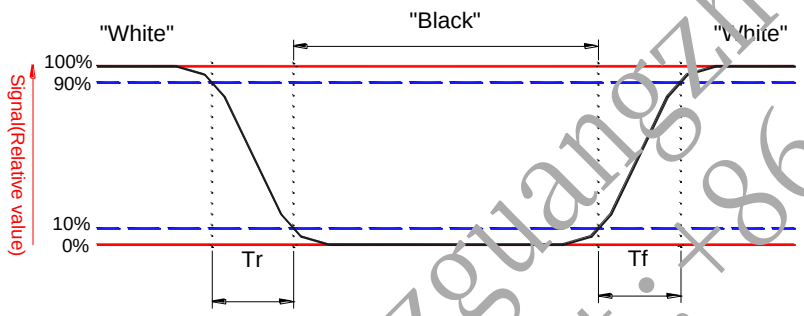

www.szguangzhuo.com
Tel/V信Wechat:+86-13411884959

www.szguangzhuo.com 广卓液晶屏 echodeng61@hotmail.com jimei@jimeihk.com +86-13411884959

www.szguangzhuo.com 广卓液晶屏 echodeng61@hotmail.com jimei@jimeihk.com +86-13411884959

Note 9. Definition of viewing angle

Viewing angle is the measurement of contrast ratio ≧10, at the screen center, over a 180° horizontal and 180° vertical range (off-normal viewing angles). The 180° viewing angle range is broken down as follows; 90° (Θ) horizontal left and right and 90° (Φ) vertical, high (up) and low (down). The measurement direction is typically perpendicular to the display surface with the screen rotated about its center to develop the desired measurement viewing angle.

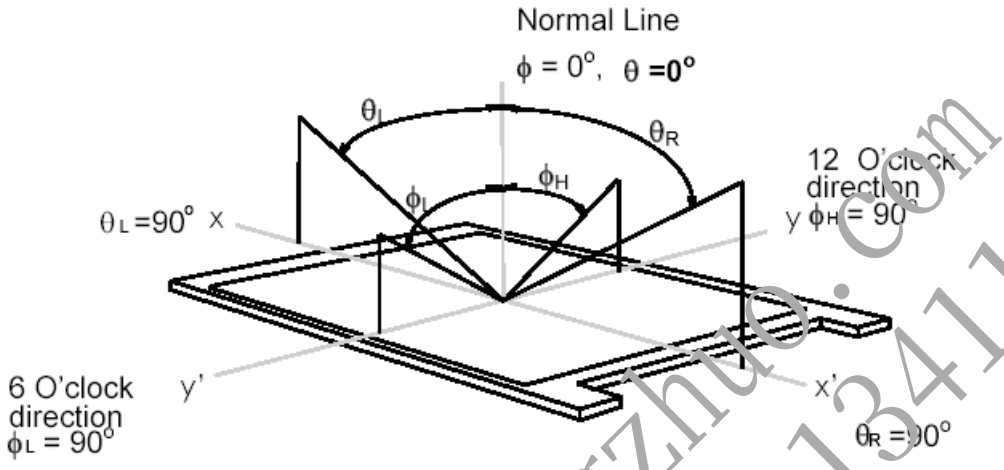

www.szguangzhuo.com
Tel/V信Wechat:+86-13411884959

www.szguangzhuo.com 广卓液晶屏 echodeng61@hotmail.com jimei@jimeihk.com +86-13411884959

www.szguangzhuo.com 广卓液晶屏 echodeng61@hotmail.com jimei@jimeihk.com +86-13411884959

3. Functional Block Diagram

The following diagram shows the functional block of the 15.6 inches wide Color TFT/LCD 40 Pin (One CH/connector Module)

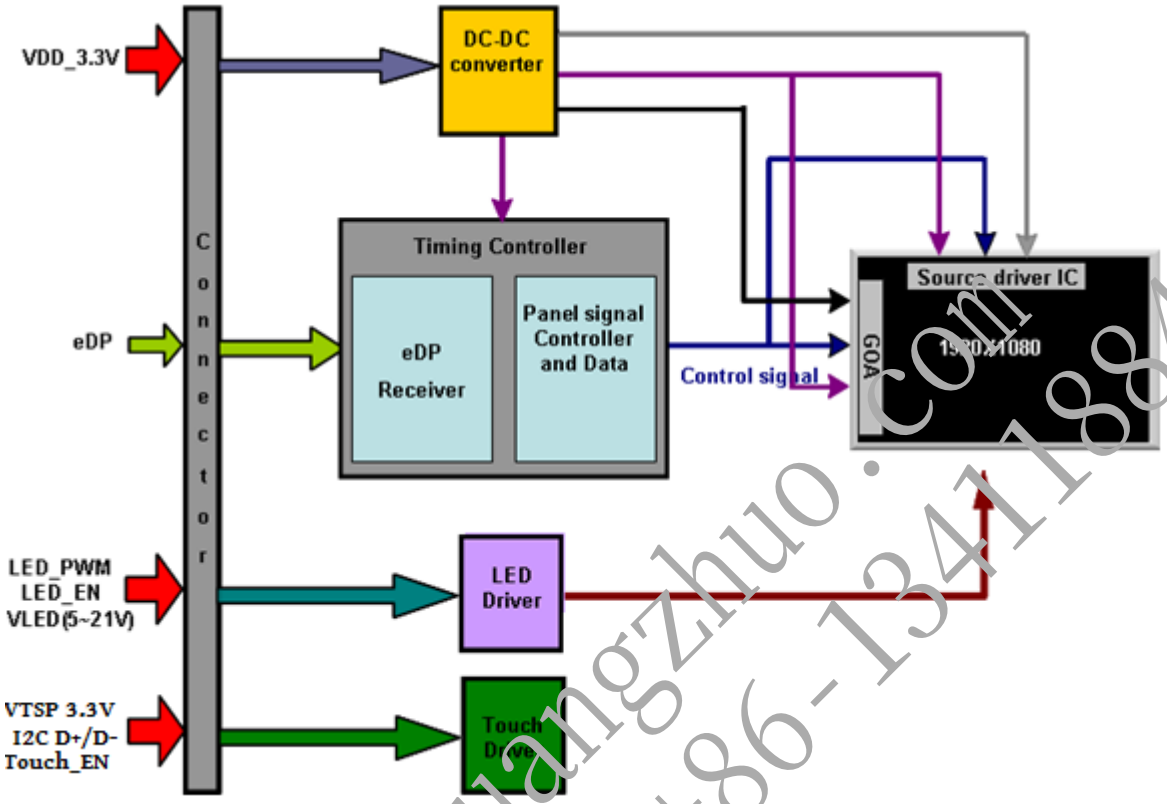

www.szguangzhuo.com
Tel/V信Wechat:+86-13411884959

www.szguangzhuo.com 广卓液晶屏 echodeng61@hotmail.com jimei@jimeihk.com +86-13411884959

www.szguangzhuo.com 广卓液晶屏 echodeng61@hotmail.com jimei@jimeihk.com +86-13411884959

4. Absolute Maximum Ratings

An absolute maximum rating of the module is as following:

4.1.1 Absolute Ratings of TFT LCD Module

Item	Symbol	Min	Max	Unit	Conditions
Logic/LCD Drive Voltage	Vin	-0.3	+4.0	[Volt]	Note 1,2

4.2 Absolute Ratings of Environment

Item	Symbol	Min	Max	Unit	Conditions
Operating Temperature	TOP	0	+50	[°C]	Note 4
Operation Humidity	HOP	5	95	[%RH]	Note 4
Storage Temperature	TST	-20	+60	[°C]	Note 4
Storage Humidity	HST	5	95	[%RH]	Note 4

Note 1: At Ta (25℃)

Note 2: Permanent damage to the device may occur if exceed maximum values

Note 3: LED specification refer to section 5.2

Note 4: For quality performance, please refer to AUO IIS (Incoming Inspection Standard)

Note 5: The packing material of system forbid to involve ammonium component

Note 6: The reliability test conditions of system do not exceed the verified conditions of TFT module

Note 7: Be sure the panel test condition do not exceed the component limitation of TFT module(TN Liquid crystal , for example)

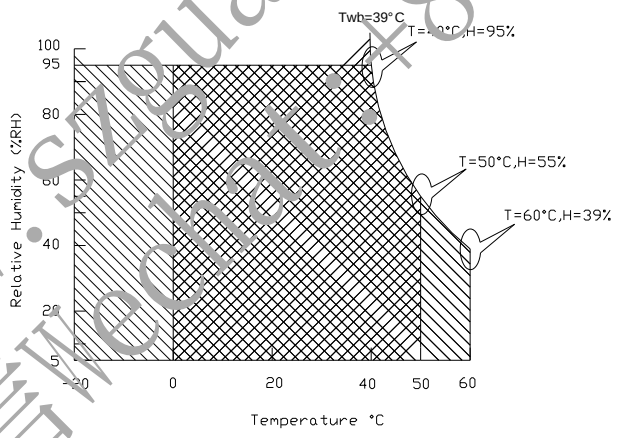

www.szguangzhuo.com Tel/V信wechat: +86-13411884959

www.szguangzhuo.com 广卓液晶屏 echodeng61@hotmail.com jimei@jimeihk.com +86-13411884959

www.szguangzhuo.com 广卓液晶屏 echodeng61@hotmail.com jimei@jimeihk.com +86-13411884959

5. Electrical Characteristics

5.1 TFT LCD Module

5.1.1 Power Specification

Input power specifications are as follows;

The power specification are measured under 25℃ and frame frenquency under 60Hz

Symble	Parameter	Min	Typ	Max	Units	Note
VDD	Logic/LCD Drive Voltage	3.0	3.3	3.6	[Volt]	
PDD	VDD Power	-	0.9	1.2	[Watt]	Note 1
IDD	IDD Current	-	-	400	[mA]	Note 1
IRush	Inrush Current	-	-	2000	[mA]	Note 2
VDDrp	Allowable Logic/LCD Drive Ripple Voltage	-	-	100	[mV] p-p	

Note 1 : PDD(typ)@ mosaic pattern Maximum Power; PDD(Max)@ R/G/B pattern Maximum Power

IDD(Max)=PDD(Max) / VDD(Min)

Note 2：Measure Condition

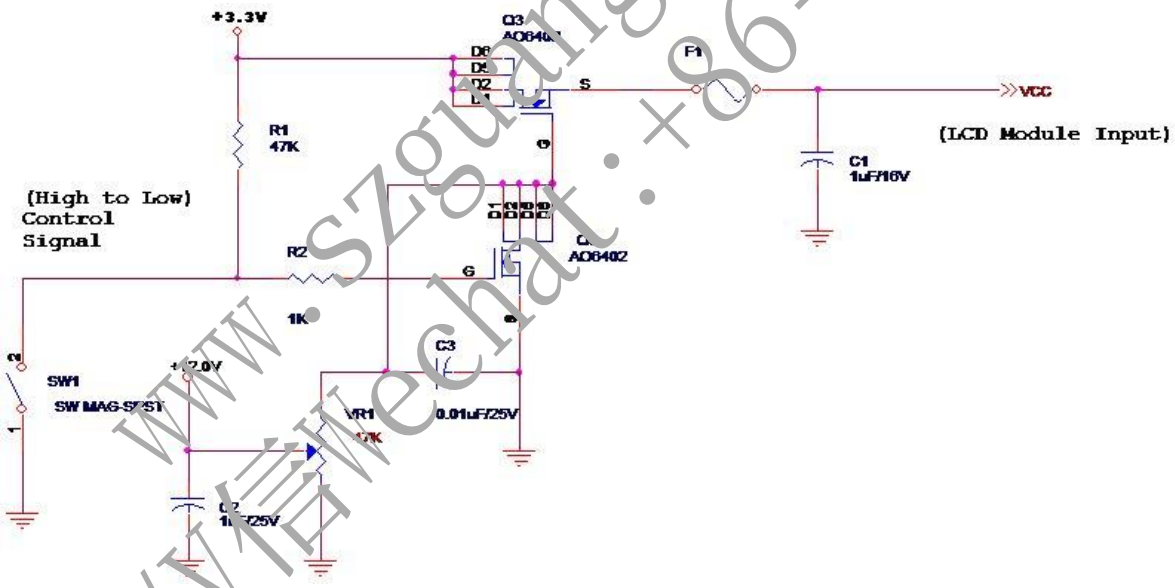

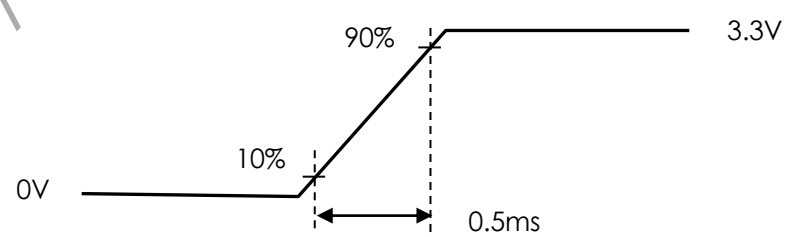

Vin rising time

www.szguangzhuo.com Tel/V信wechat：+86-13411884959

www.szguangzhuo.com 广卓液晶屏 echodeng61@hotmail.com jimei@jimeihk.com +86-13411884959

www.szguangzhuo.com 广卓液晶屏 echodeng61@hotmail.com jimei@jimeihk.com +86-13411884959

5.1.2 Signal Electrical Characteristics

Signal electrical characteristics are as follows;

Display Port main link signal:

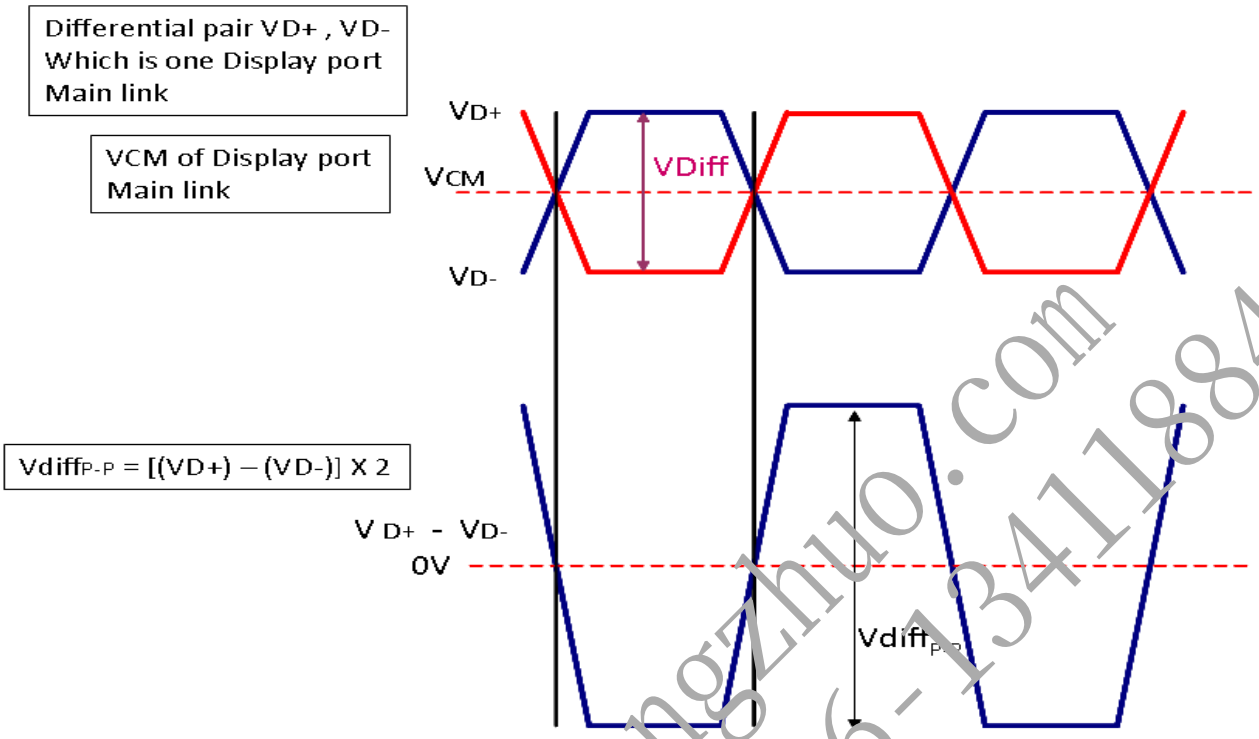

Display port main link					
		Min	Typ	Max	unit
VCM	RX input DC Common Mode Voltage		0		V
$VDiff_{P-P}$	Peak-to-peak Voltage at a receiving Device	HBR1:150		1320	mV

Follow as VESA display port standard V1.4

Display Port AUX_CH signal:

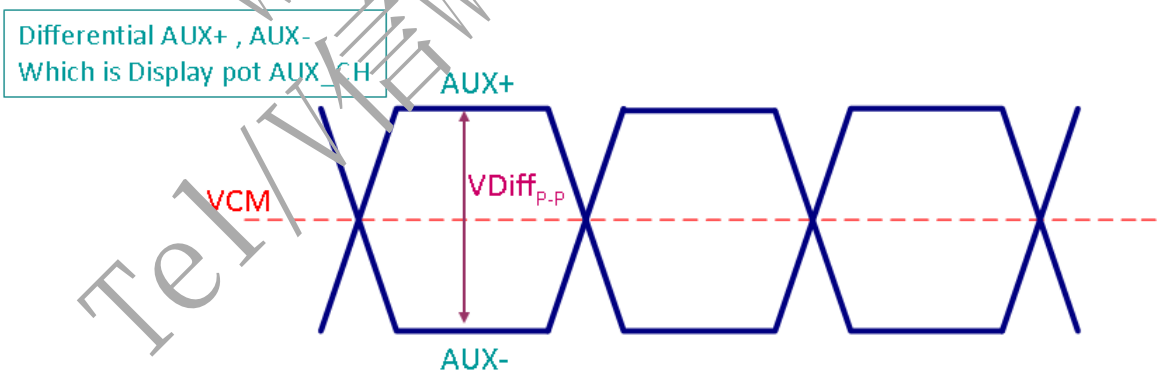

www.szguangzhuo.com Tel/Wechat:+86-13411884959

www.szguangzhuo.com 广卓液晶屏 echodeng61@hotmail.com jimei@jimeihk.com +86-13411884959

www.szguangzhuo.com 广卓液晶屏 echodeng61@hotmail.com jimei@jimeihk.com +86-13411884959

Display port AUX_CH					
		Min	Typ	Max	unit
VCM	AUX DC Common Mode Voltage		0		V
$VDiff_{P-P}$	AUX Peak-to-peak Voltage at a receiving Device	270		800	mV

Follow as VESA display port standard V1.3.

Display Port VHPD signal:

Display port VHPD					
		Min	Typ	Max	unit
VHPD	HPD Voltage	2.25		3.6	V

Follow as VESA display port standard V1.3

www.szguangzhuo.com
Tel/V信Wechat:+86-13411884959

www.szguangzhuo.com 广卓液晶屏 echodeng61@hotmail.com jimei@jimeihk.com +86-13411884959

www.szguangzhuo.com 广卓液晶屏 echodeng61@hotmail.com jimei@jimeihk.com +86-13411884959

5.2 Backlight Unit

5.2.1 LED characteristics

Parameter	Symbol	Min	Typ	Max	Units	Condition
Backlight Power Consumption	PLED	-	-	3.6	[Watt]	(Ta=25°C), Note 1 Vin =12V
LED Life-Time	N/A	15,000	-	-	Hour	(Ta=25°C), Note 2 I_F=23 mA

Note 1: Calculator value for reference P_{LED} = VF (Normal Distribution) * IF (Normal Distribution) / Efficiency

Note 2: The LED life-time define as the estimated time to 50% degradation of initial luminous.

5.2.2 Backlight input signal characteristics

Parameter	Symbol	Min	Typ	Max	Units	Remark
LED Power Supply	VLED	6.0	12.0	21.0	[Volt]	Define as Connector Interface (Ta=25℃)
LED Enable Input High Level	VLED_EN *Note 1	2.5	-	5.5	[Volt]	
LED Enable Input Low Level		-	-	0.5	[Volt]	
PWM Logic Input High Level	VPWM_EN *Note 1	2.5	-	5.5	[Volt]	
PWM Logic Input Low Level		-	-	0.5	[Volt]	
PWM Input Frequency	FPWM	200	1K	10K	Hz	
PWM Duty Ratio	Duty	5	--	100	%	

Note 1 : Recommend system pull up/down resistor no bigger than 10kohm 5.3 Touch Sensor Power Consumption

www.szguangzhuo.com Tel/V信wechat:+86-13411884959

www.szguangzhuo.com 广卓液晶屏 echodeng61@hotmail.com jimei@jimeihk.com +86-13411884959

www.szguangzhuo.com 广卓液晶屏 echodeng61@hotmail.com jimei@jimeihk.com +86-13411884959

6. Signal Interface Characteristic

6.1 Pixel Format Image

Following figure shows the relationship of the input signals and LCD pixel format.

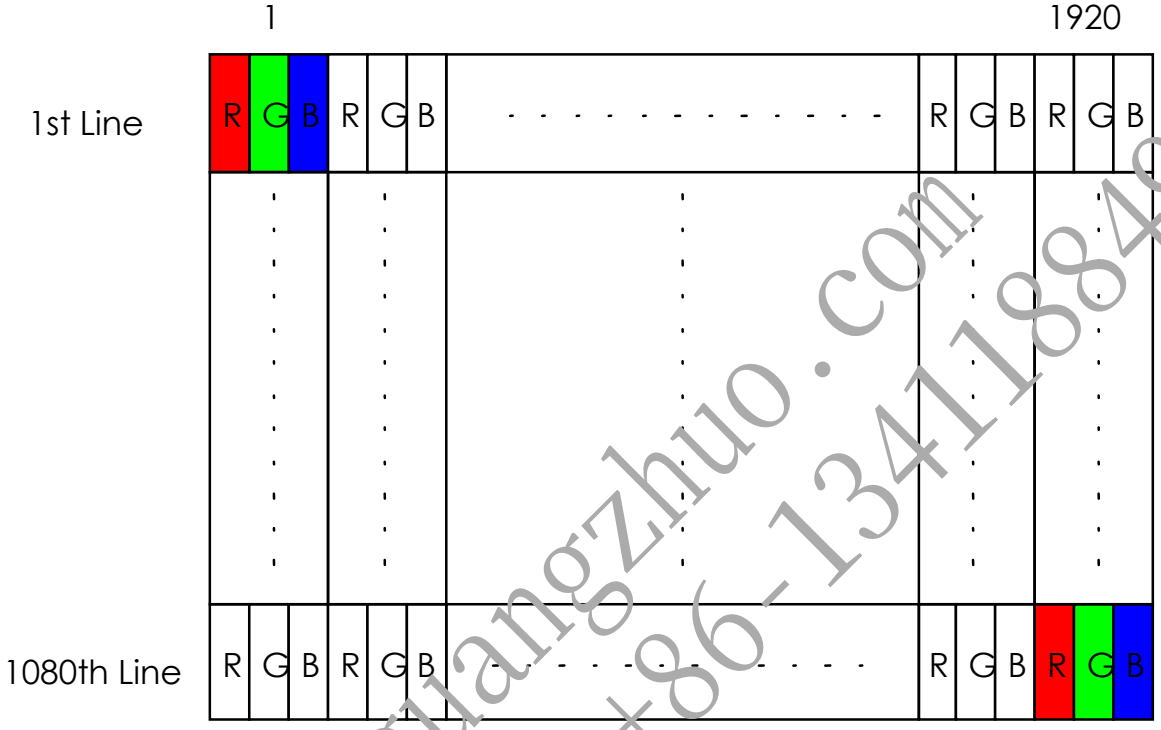

www.szguangzhuo.com
Tel/V信Wechat:+86-13411884959

www.szguangzhuo.com 广卓液晶屏 echodeng61@hotmail.com jimei@jimeihk.com +86-13411884959

www.szguangzhuo.com 广卓液晶屏 echodeng61@hotmail.com jimei@jimeihk.com +86-13411884959

6.2 Integration Interface Requirement

6.2.1 Connector Description

Physical interface is described as for the connector on module.
These connectors are capable of accommodating the following signals and will be following components.

Connector Name / Designation	For Signal Connector
Manufacturer	IPEX or compatible
Type / Part Number	IPEX 20455-040E-76B or compatible
Mating Housing/Part Number	IPEX 20453 or compatible

6.2.2 Pin Assignment

eDP lane is a differential signal technology for LCD interface and high speed data transfer device.

PIN NO	Symbol	Function
1	NC Reserved	Reserved for LCD supplier
2	GND	High Speed Ground
3	Lane1_N	Complement Signal Link Lane 1
4	Lane1_P	True Signal Link Lane 1
5	GND	High Speed Ground
6	Lane0_N	Complement Signal Link Lane 0
7	Lane0_P	True Signal Link Lane 0
8	GND	High Speed Ground
9	AUX_CH_P	True Signal Auxiliary Channel
10	AUX_CH_N	Complement Signal Auxiliary Channel
11	GND	High Speed Ground
12	VCC	LCD logic
13	VCC	LCD logic
14	LCD Self Test or NC	LCD Panel Self Test Enable (Optional)
15	GND	LCD logic and driver ground
16	GND	LCD logic and driver ground
17	HPD	HPD signal pin
18	BL_GND	LED Backlight ground
19	BL_GND	LED Backlight ground
20	BL_GND	LED Backlight ground

www.szguangzhuo.com Tel/Wechat:+86-13411884959

www.szguangzhuo.com 广卓液晶屏 echodeng61@hotmail.com jimei@jimeihk.com +86-13411884959

www.szguangzhuo.com 广卓液晶屏 echodeng61@hotmail.com jimei@jimeihk.com +86-13411884959

21	BL_GND	LED Backlight ground
22	BL ENABLE	LED Backlight control on/off control
23	BL PWM	System PWM signal input for dimming
24	NC Reserved	Reserved for LCD supplier
25	NC Reserved	Reserved for LCD supplier
26	VLED	LED Backlight Power
27	VLED	LED Backlight Power
28	VLED	LED Backlight Power
29	VLED	LED Backlight Powe
30	NC	No Connect (Reserved for CM)
31	NC	No Connect
32	NC	No Connect
33	GND	Ground–Shield
34	NC	No Connect
35	NC	No Connect
36	NC	No Connect
37	NC	No Connect
38	NC	No Connect
39	NC	No Connect
40	NC	No Connect

www.szguangzhuo.com
Tel/V信Wechat:+86-13411884959

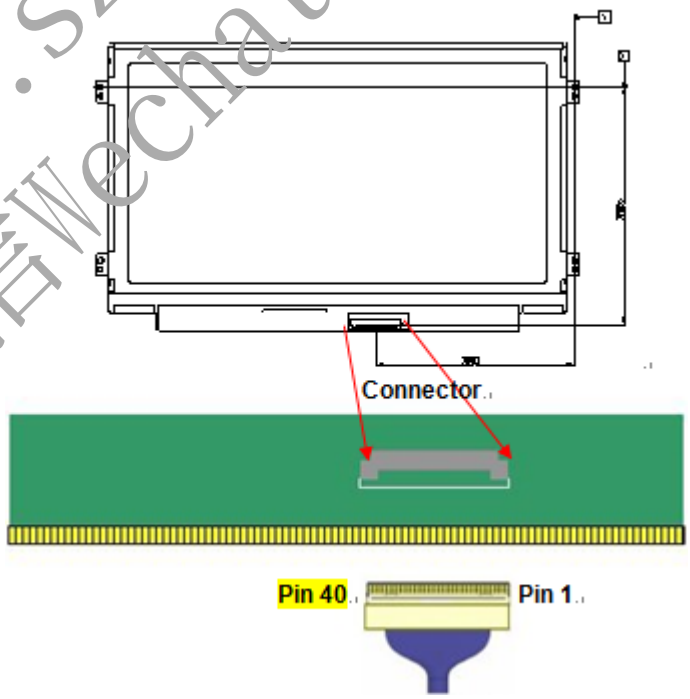

Note1：start from right side
Note2：Input signals shall be low or High-impedance state when VDD is off.

www.szguangzhuo.com 广卓液晶屏 echodeng61@hotmail.com jimei@jimeihk.com +86-13411884959

www.szguangzhuo.com 广卓液晶屏 echodeng61@hotmail.com jimei@jimeihk.com +86-13411884959

6.3 Interface Timing

Basically, interface timings should match the 1920x1080 /60Hz manufacturing guide line timing.

Parameter		Symbol	Min.	Typ.	Max.	Unit
Frame Rate		-	-	60	-	Hz
Clock frequency		$1/T_{Clock}$	113.6	142	150	MHz
Vertical Section	Period	T_V	1126	1126	1080+A	T_{Line}
	Active	T_{VD}	1080			
	Blanking	T_{VB}	46	46	A	
Horizontal Section	Period	T_H	2100	2100	1920+B	T_{Clock}
	Active	T_{HD}	1920			
	Blanking	T_{HB}	180	180	B	

Note : 1. DE mode only

2. The maximum clock frequency = (1920+B)*(1080+A)*60 < 150 MHz

www.szguangzhuo.com
Tel/V信Wechat:+86-13411884959

www.szguangzhuo.com 广卓液晶屏 echodeng61@hotmail.com jimei@jimeihk.com +86-13411884959

www.szguangzhuo.com 广卓液晶屏 echodeng61@hotmail.com jimei@jimeihk.com +86-13411884959

6.4 Power ON/OFF Sequence

Power on/off sequence is as follows. Interface signals and LED on/off sequence are also shown in the chart. Signals from any system shall be Hi-Z state or low level when VDD is off

Display Port panel power sequence:

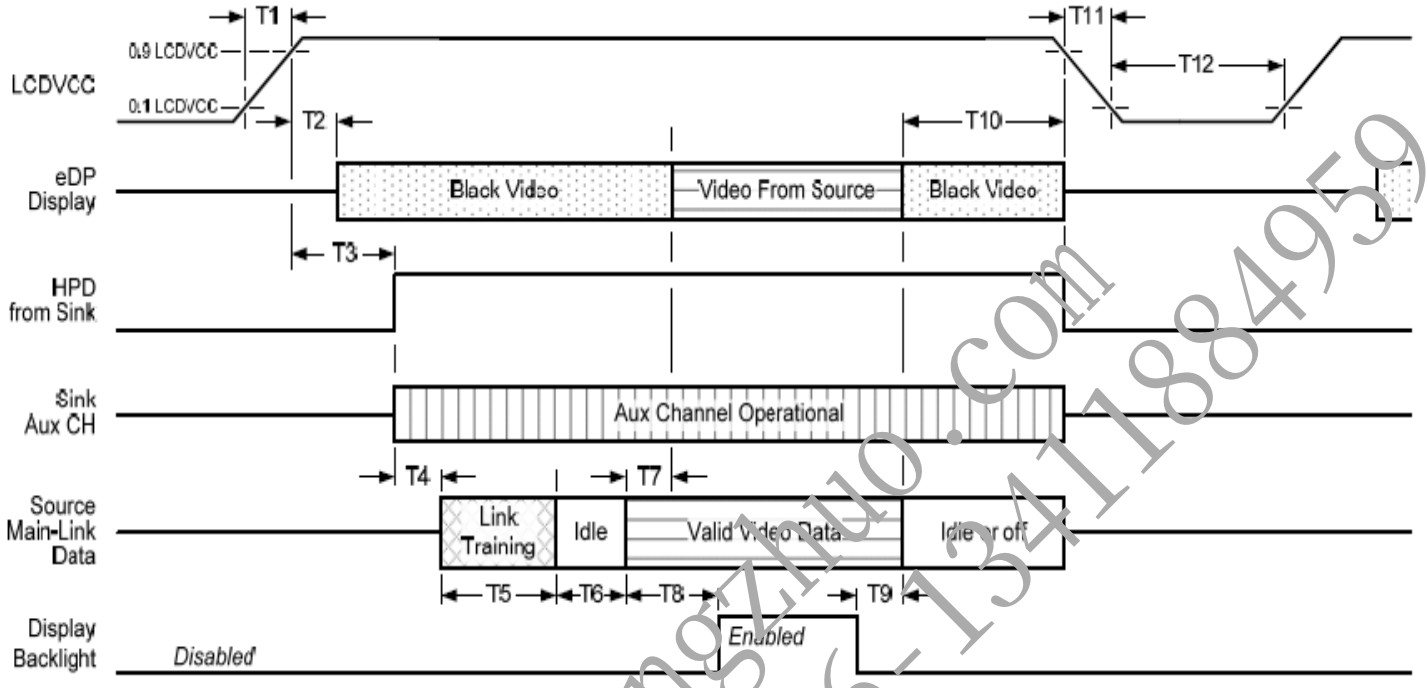

Display port interface power up/down sequence, normal system operation

Display Port AUX_CH transaction only:

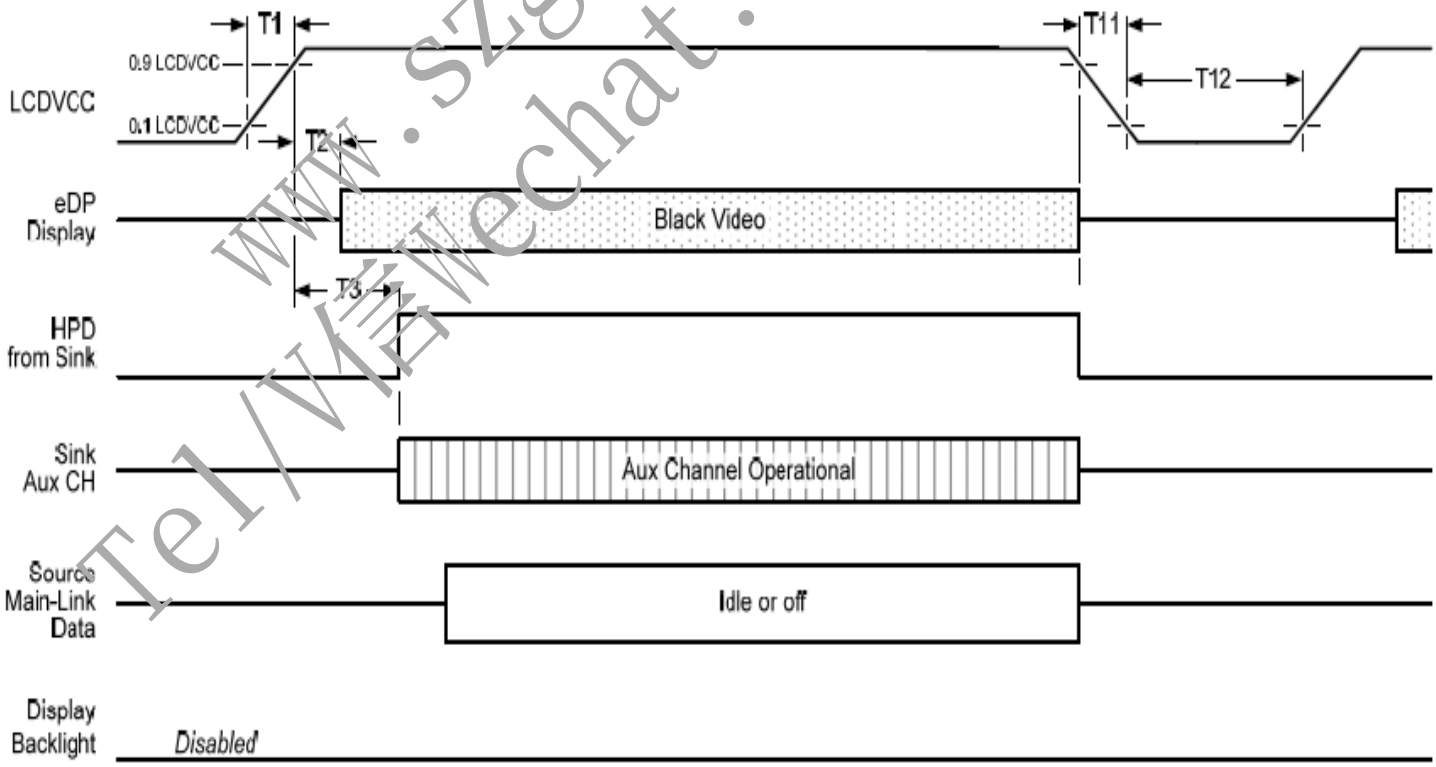

Display port interface power up/down sequence, AUX_CH transaction only

www.szguangzhuo.com Tel/Wechat:+86-13411884959

www.szguangzhuo.com 广卓液晶屏 echodeng61@hotmail.com jimei@jimeihk.com +86-13411884959

www.szguangzhuo.com 广卓液晶屏 echodeng61@hotmail.com jimei@jimeihk.com +86-13411884959

Display Port panel power sequence timing parameter:

Timing parameter	Description	Reqd. by	Limits			Notes
			Min.	Typ.	Max.	
T1	power rail rise time, 10% to 90%	source	0.5ms		10ms	
T2	delay from LCDVDD to black video generation	sink	0ms		200ms	prevents display noise until valid video data is received from the source
T3	delay from LCDVDD to HPD high	sink	0ms		200ms	sink AUX_CH must be operational upon HPD high.
T4	delay from HPD high to link training initialization	source				allows for source to read link capability and initialize.
T5	link training duration	source				dependant on source link training protocol.
T6	link idle	source				Min accounts for required BS-Idle pattern. Max allows for source frame synchronization.
T7	delay from valid video data from source to video on display	sink	0ms		50ms	max allows sink validate video data and timing.
T8	delay from valid video data from source to backlight enable	source				source must assure display video is stable.
T9	delay from backlight disable to end of valid video data	source				source must assure backlight is no longer illuminated.
T10	delay from end of valid video data from source to power off	source	0ms		500ms	
T11	power rail fall time, 905 to 10%	source			10ms	
T12	power off time	source	500ms			

Note1: The sink must include the ability to generate black video autonomously. The sink must automatically enable black video under the following conditions:
-upon LCDVDD power on (with in T2 max)-when the "Novideostream_Flag" (VB-ID Bit 3) is received from the source (at the end of T9).
-when no main link data, or invalid video data, is received from the source. Black video must be displayed within 64ms (typ) from the start of either condition. Video data can be deemed invalid based on MSA and timing information, for example.

Note 2: The sink may implement the ability to disable the black video function, as described in Note 1, above, for system development and debugging purpose.

Note 3: The sink must support AUX_CH polling by the source immediately following LCDVDD power on without causing damage to the sink device (the source can re-try if the sink is not ready). The sink must be able to respond to an AUX_CH transaction with the time specified within T3 max.

www.szguangzhuo.com Tel/Wechat:+86-13411884959

www.szguangzhuo.com 广卓液晶屏 echodeng61@hotmail.com jimei@jimeihk.com +86-13411884959

www.szguangzhuo.com 广卓液晶屏 echodeng61@hotmail.com jimei@jimeihk.com +86-13411884959

Display Port panel B/L power sequence timing parameter:

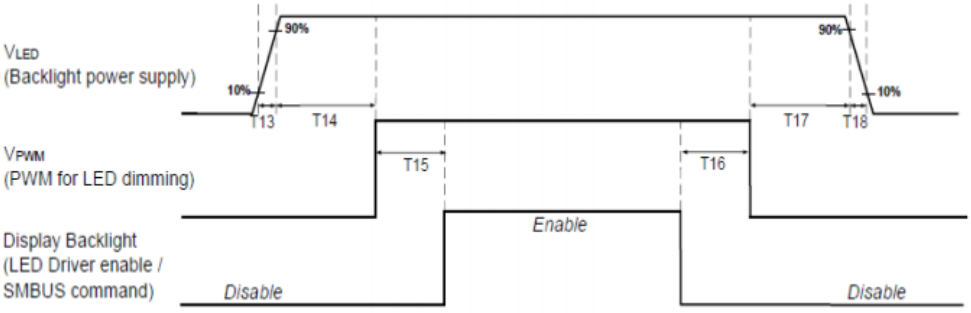

	Min (ms)	Max (ms)
T13	0.5	10
T14	10	-
T15	0	-
T16	0	-
T17	10	-
T18	0.5	10
T19	1*	-
T20	1*	-

Seamless change: $T_{19}/T_{20} = 5xT_{PWM}$*

*T_{PWM}= 1/PWM Frequency

Note : When the adapter is hot plugged, the backlight power supply sequence is shown as below.

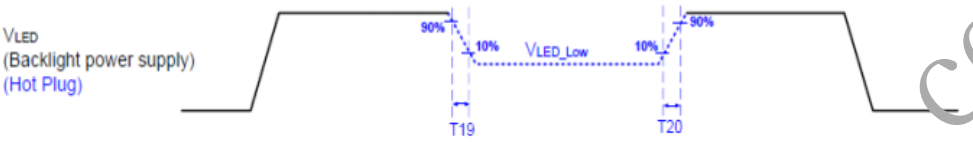

www.szguangzhuo.com
Tel/V信Wechat:+86-13411884959

www.szguangzhuo.com 广卓液晶屏 echodeng61@hotmail.com jimei@jimeihk.com +86-13411884959

www.szguangzhuo.com 广卓液晶屏 echodeng61@hotmail.com jimei@jimeihk.com +86-13411884959

7. Panel Reliability Test

7.1 Vibration Test

Test Spec:

- Test method: Non-Operation
- Acceleration: 1.5 G
- Frequency: 10 - 500Hz Random
- Sweep: 30 Minutes each Axis (X, Y, Z)

7.2 Shock Test

Test Spec:

- Test method: Non-Operation
- Acceleration: 220 G , Half sine wave
- Active time: 2 ms
- Pulse: X,Y,Z .one time for each side

7.3 Reliability Test

Items	Required Condition	Note
Temperature Humidity Bias	Ta= 40°C, 90%RH, 240h	
High Temperature Operation	Ta= 50°C, Dry, 240h	
Low Temperature Operation	Ta=0°C, 240h	
High Temperature Storage	Ta= 60°C, 240h	
Low Temperature Storage	Ta= -20°C, 240h	
Thermal Shock Test	Ta=-20°C(30min) ~60°C(30min), 100cycles condition.	
ESD	Contact : ±8 KV Air : ±15 KV	Note 1

Note1: According to EN 61000-4-2 , ESD class B: Some performance degradation allowed. No data lost

. Self-recoverable. No hardware failures.

Remark: MTBF (Excluding the LED): 30,000 hours with a confidence level 90%

www.szguangzhuo.com Tel/Wechat:+86-13411884959

www.szguangzhuo.com 广卓液晶屏 echodeng61@hotmail.com jimei@jimeihk.com +86-13411884959

www.szguangzhuo.com 广卓液晶屏 echodeng61@hotmail.com jimei@jimeihk.com +86-13411884959

8. Mechanical Characteristics

8.1 LCM Outline Dimension

8.1.1 Standard Front View

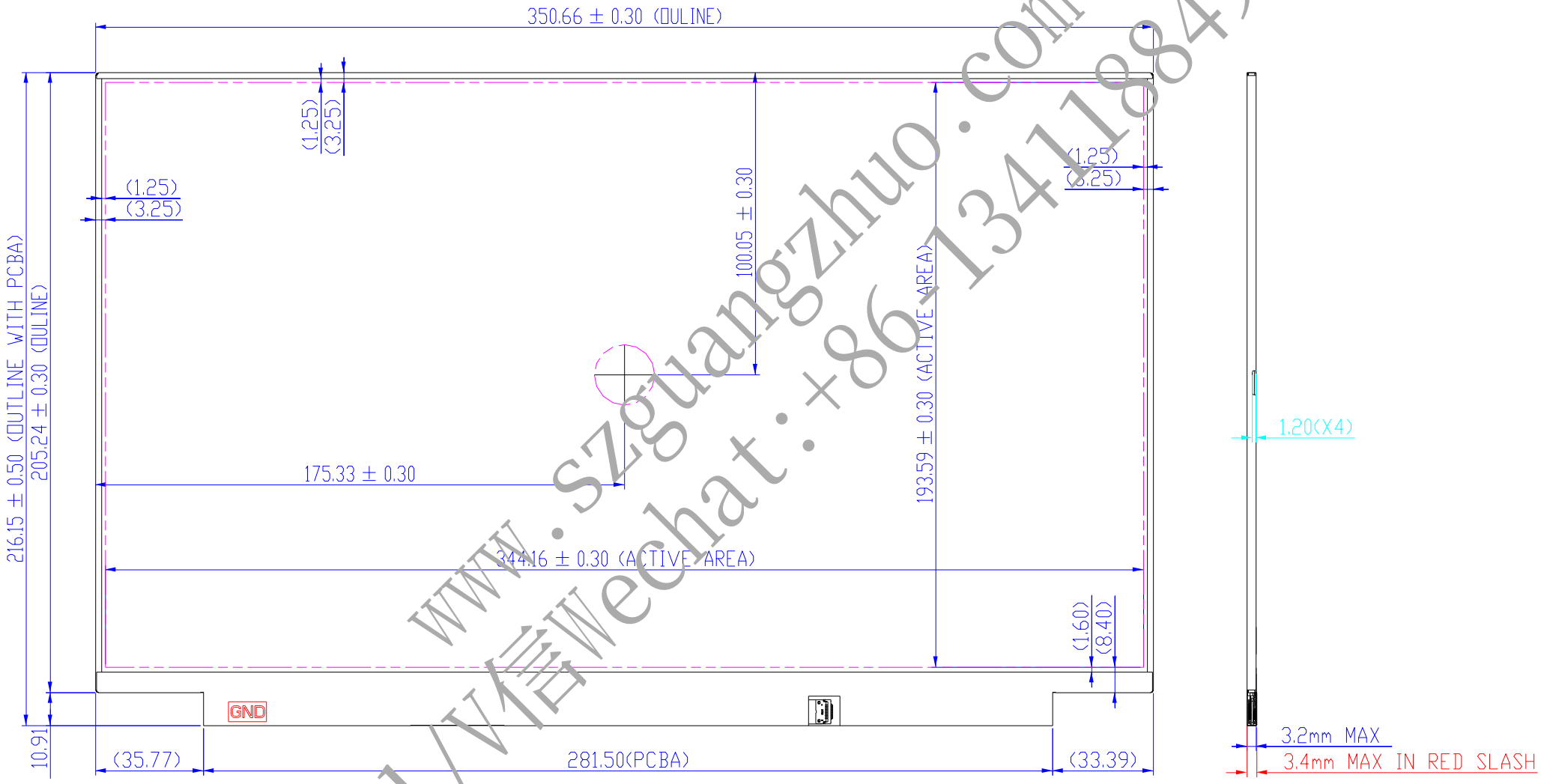

www.szguangzhuo.com
Tel/Wechat:+86-13411884959

www.szguangzhuo.com 广卓液晶屏 echodeng61@hotmail.com jimei@jimeihk.com +86-13411884959

www.szguangzhuo.com 广卓液晶屏 echodeng61@hotmail.com jimei@jimeihk.com +86-13411884959

8.1.2 Standard Rear View

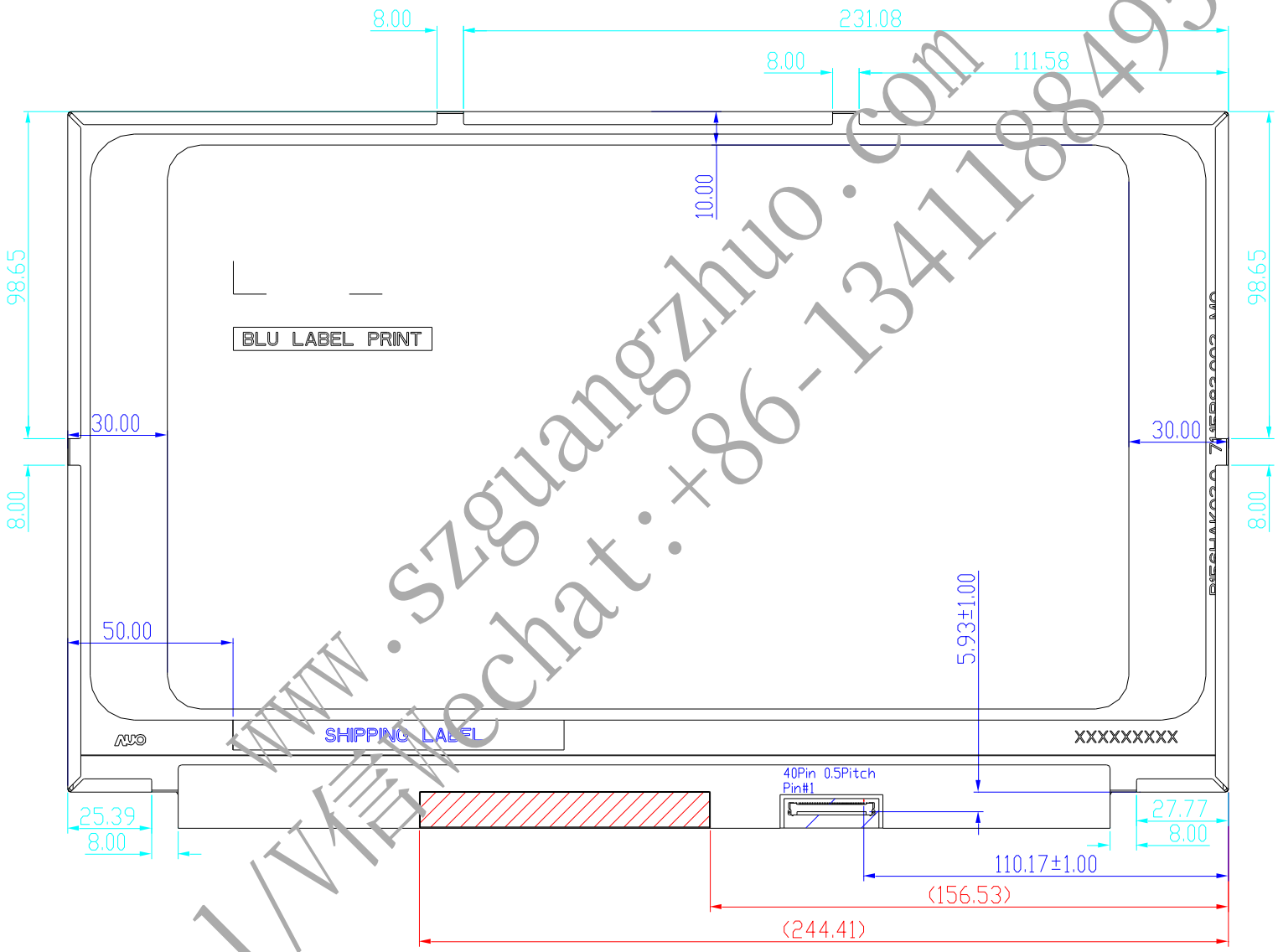

www.szguangzhuo.com
Tel/V信wechat:+86-13411884959

www.szguangzhuo.com 广卓液晶屏 echodeng61@hotmail.com jimei@jimeihk.com +86-13411884959

www.szguangzhuo.com 广卓液晶屏 echodeng61@hotmail.com jimei@jimeihk.com +86-13411884959

9. Shipping and Package

9.1 Shipping Label Format

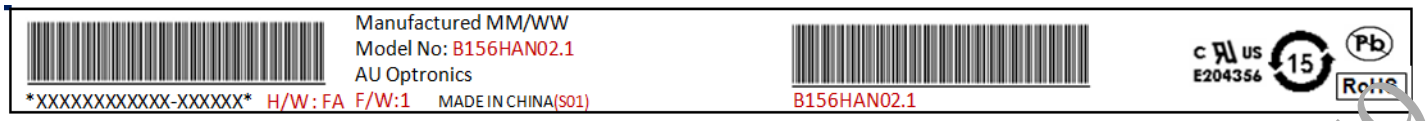

www.szguangzhuo.com
Tel/V信Wechat:+86-13411884959

www.szguangzhuo.com 广卓液晶屏 echodeng61@hotmail.com jimei@jimeihk.com +86-13411884959

www.szguangzhuo.com 广卓液晶屏 echodeng61@hotmail.com jimei@jimeihk.com +86-13411884959

9.2 Carton Package

www.szguangzhuo.com
Tel/V信Wechat:+86-13411884959

www.szguangzhuo.com 广卓液晶屏 echodeng61@hotmail.com jimei@jimeihk.com +86-13411884959

www.szguangzhuo.com 广卓液晶屏 echodeng61@hotmail.com jimei@jimeihk.com +86-13411884959

9.3 Shipping Package of Palletizing Sequence

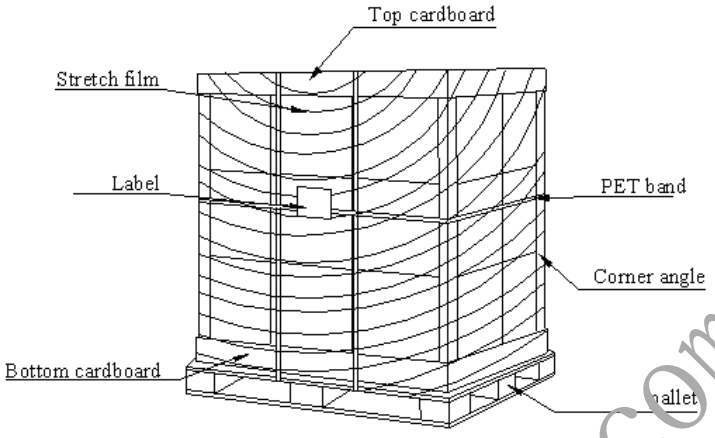

www.szguangzhuo.com
Tel/V信Wechat:+86-13411884959

www.szguangzhuo.com 广卓液晶屏 echodeng61@hotmail.com jimei@jimeihk.com +86-13411884959

www.szguangzhuo.com 广卓液晶屏 echodeng61@hotmail.com jimei@jimeihk.com +86-13411884959

10. Appendix: EDID Description

Address	FUNCTION	Value	Value	Value	Note
HEX		HEX	BIN	DEC	
00	Header	00	00000000	0	
01	Header	FF	11111111	255	
02	Header	FF	11111111	255	
03	Header	FF	11111111	255	
04	Header	FF	11111111	255	
05	Header	FF	11111111	255	
06	Header	FF	11111111	255	
07	Header	00	00000000	0	
08	EISA Manuf. Code LSB	06	00000110	6	
09	Compressed ASCII	AF	10101111	175	
0A	Product Code	ED	11101101	237	
0B	hex, LSB first	21	00100001	33	
0C	32-bit ser #	00	00000000	0	
0D	ID S/N - option	00	00000000	0	
0E	ID S/N - option	00	00000000	0	
0F	ID S/N - option	00	00000000	0	
10	Week of manufacture	00	00000000	0	
11	Year of manufacture	1C	00011100	28	
12	EDID Structure ver.	01	00000001	1	
13	EDID revision #	04	00000100	4	
14	**Video input def. (digital I/P, non-TMDS, CRGB)**	95	10010101	149	
15	**Max H image size (rounded to cm)**	22	00100010	34	
16	**Max V image size (rounded to cm)**	13	00010011	19	
17	**Display Gamma (=(gamma*100)-100)**	78	01111000	120	
18	**Feature support (no DPMS, Active OFF, RGB, tmg Blk#1)**	03	00000011	3	
19	Red/green low bits (Lower 2:2:2:2 bits)	05	00000101	5	
1A	Blue/white low bits (Lower 2:2:2:2 bits)	B5	10110101	181	
1B	Red x (Upper 8 bits)	94	10010100	148	
1C	Red y/ highER 8 bits	59	01011001	89	
1D	Green x	59	01011001	89	
1E	Green y	92	10010010	146	
1F	Blue x	28	00101000	40	
20	Blue y	1D	00011101	29	
21	White x	50	01010000	80	
22	White y	54	01010100	84	
23	Established timing 1	00	00000000	0	
24	Established timing 2	00	00000000	0	
25	Established timing 3	00	00000000	0	
26	Standard timing #1	01	00000001	1	
27	Standard timing #1	01	00000001	1	
28	Standard timing #2	01	00000001	1	
29	Standard timing #2	01	00000001	1	

www.szguangzhuo.com Tel/V信wechat:+86-13411884959

www.szguangzhuo.com 广卓液晶屏 echodeng61@hotmail.com jimei@jimeihk.com +86-13411884959

www.szguangzhuo.com 广卓液晶屏 echodeng61@hotmail.com jimei@jimeihk.com +86-13411884959

2A	Standard timing #3	01	00000001	1	
2B	Standard timing #3	01	00000001	1	
2C	Standard timing #4	01	00000001	1	
2D	Standard timing #4	01	00000001	1	
2E	Standard timing #5	01	00000001	1	
2F	Standard timing #5	01	00000001	1	
30	Standard timing #6	01	00000001	1	
31	Standard timing #6	01	00000001	1	
32	Standard timing #7	01	00000001	1	
33	Standard timing #7	01	00000001	1	
34	Standard timing #8	01	00000001	1	
35	Standard timing #8	01	00000001	1	
36	Pixel Clock/10000 LSB	14	00010100	20	
37	Pixel Clock/10000 USB	37	00110111	55	
38	Horz active Lower 8bits	80	10000000	128	
39	Horz blanking Lower 8bits	B4	10110100	180	
3A	HorzAct:HorzBlnk Upper 4:4 bits	70	01110000	112	
3B	Vertical Active Lower 8bits	38	00111000	56	
3C	Vertical Blanking Lower 8bits	24	00100100	36	
3D	Vert Act : Vertical Blanking (upper 4:4 bit)	40	01000000	64	
3E	HorzSync. Offset	6C	01101100	108	
3F	HorzSync.Width	30	00110000	48	
40	VertSync.Offset : VertSync.Width	AA	10101010	170	
41	Horz&Vert Sync Offset/Width Upper 2bits	00	00000000	0	
42	Horizontal Image Size Lower 8bits	58	01011000	88	
43	Vertical Image Size Lower 8bits	C1	11000001	193	
44	Horizontal & Vertical Image Size (upper 4:4 bits)	10	00010000	16	
45	Horizontal Border (zero for internal LCD)	00	00000000	0	
46	Vertical Border (zero for internal LCD)	00	00000000	0	
47	Signal (non-int, norm, no stereo, sep sync, neg pol)	18	00011000	24	
48	Pixel Clock/10000 LSB	B8	10111000	184	
49	Pixel Clock/10000 USB	24	00100100	36	
4A	Horz active Lower 8bits	80	10000000	128	
4B	Horz blanking Lower 8bits	B4	10110100	180	
4C	HorzAct:HorzBlnk Upper 4:4 bits	70	01110000	112	
4D	Vertical Active Lower 8bits	38	00111000	56	
4E	Vertical Blanking Lower 8bits	24	00100100	36	
4F	Vert Act : Vertical Blanking (upper 4:4 bit)	40	01000000	64	
50	HorzSync. Offset	6C	01101100	108	
51	HorzSync.Width	30	00110000	48	
52	VertSync.Offset : VertSync.Width	AA	10101010	170	
53	Horz&Vert Sync Offset/Width Upper 2bits	00	00000000	0	
54	Horizontal Image Size Lower 8bits	58	01011000	88	
55	Vertical Image Size Lower 8bits	C1	11000001	193	
56	Horizontal & Vertical Image Size (upper 4:4 bits)	10	00010000	16	

www.szguangzhuo.com
Tel/Wechat:+86-13411884959

www.szguangzhuo.com 广卓液晶屏 echodeng61@hotmail.com jimei@jimeihk.com +86-13411884959

www.szguangzhuo.com 广卓液晶屏 echodeng61@hotmail.com jimei@jimeihk.com +86-13411884959

57	Horizontal Border (zero for internal LCD)	00	00000000	0	
58	Vertical Border (zero for internal LCD)	00	00000000	0	
59	Signal (non-intr, norm, no stero, sep sync, neg pol)	18	00011000	24	
5A	descriptor #3	00	00000000	0	
5B	Reserved for definition	00	00000000	0	
5C	Reserved for definition	00	00000000	0	
5D	ASCII String	FE	11111110	254	
5E	Reserved for definition	00	00000000	0	
5F	Manufacture	41	01000001	65	A
60	Manufacture	55	01010101	85	U
61	Manufacture	4F	01001111	79	O
62	Reserved for definition	0A	00001010	10	
63	Reserved for definition	20	00100000	32	
64	Reserved for definition	20	00100000	32	
65	Reserved for definition	20	00100000	32	
66	Reserved for definition	20	00100000	32	
67	Reserved for definition	20	00100000	32	
68	Reserved for definition	20	00100000	32	
69	Reserved for definition	20	00100000	32	
6A	Reserved for definition	20	00100000	32	
6B	Reserved for definition	20	00100000	32	
6C	Reserved for definition	00	00000000	0	
6D	descriptor #4	00	00000000	0	
6E	Reserved for definition	00	00000000	0	
6F	Reserved for definition	FE	11111110	254	
70	Reserved for definition	00	00000000	0	
71	Manufacture P/N	42	01000010	66	B
72	Manufacture P/N	31	00110001	49	1
73	Manufacture P/N	35	00110101	53	5
74	Manufacture P/N	36	00110110	54	6
75	Manufacture P/N	48	01001000	72	H
76	Manufacture P/N	41	01000001	65	A
77	Manufacture P/N	4E	01001110	78	N
78	Manufacture P/N	30	00110000	48	0
79	Manufacture P/N	32	00110010	50	2
7A	Manufacture P/N	2E	00101110	46	.
7B	Manufacture P/N	31	00110001	49	1
7C	Reserved for definition	20	00100000	32	
7D	Reserved for definition	0A	00001010	10	
7E	Extension Flag	00	00000000	0	
7F	Checksum	F2	11110010	242	

www.szguangzhuo.com Tel/Wechat: +86-13411884959

www.szguangzhuo.com 广卓液晶屏 echodeng61@hotmail.com jimei@jimeihk.com +86-13411884959